ASSEMBLY INSTRUCTION

WARDROBE HUH

radis

Nordic Elegance

WWW.RADIS.EE

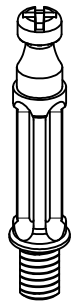

X26

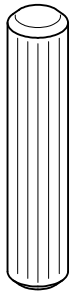

X46

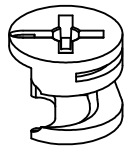

X26

X4

X9

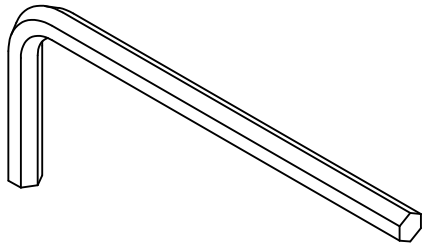

X1

X12

X2

X4

X1

1

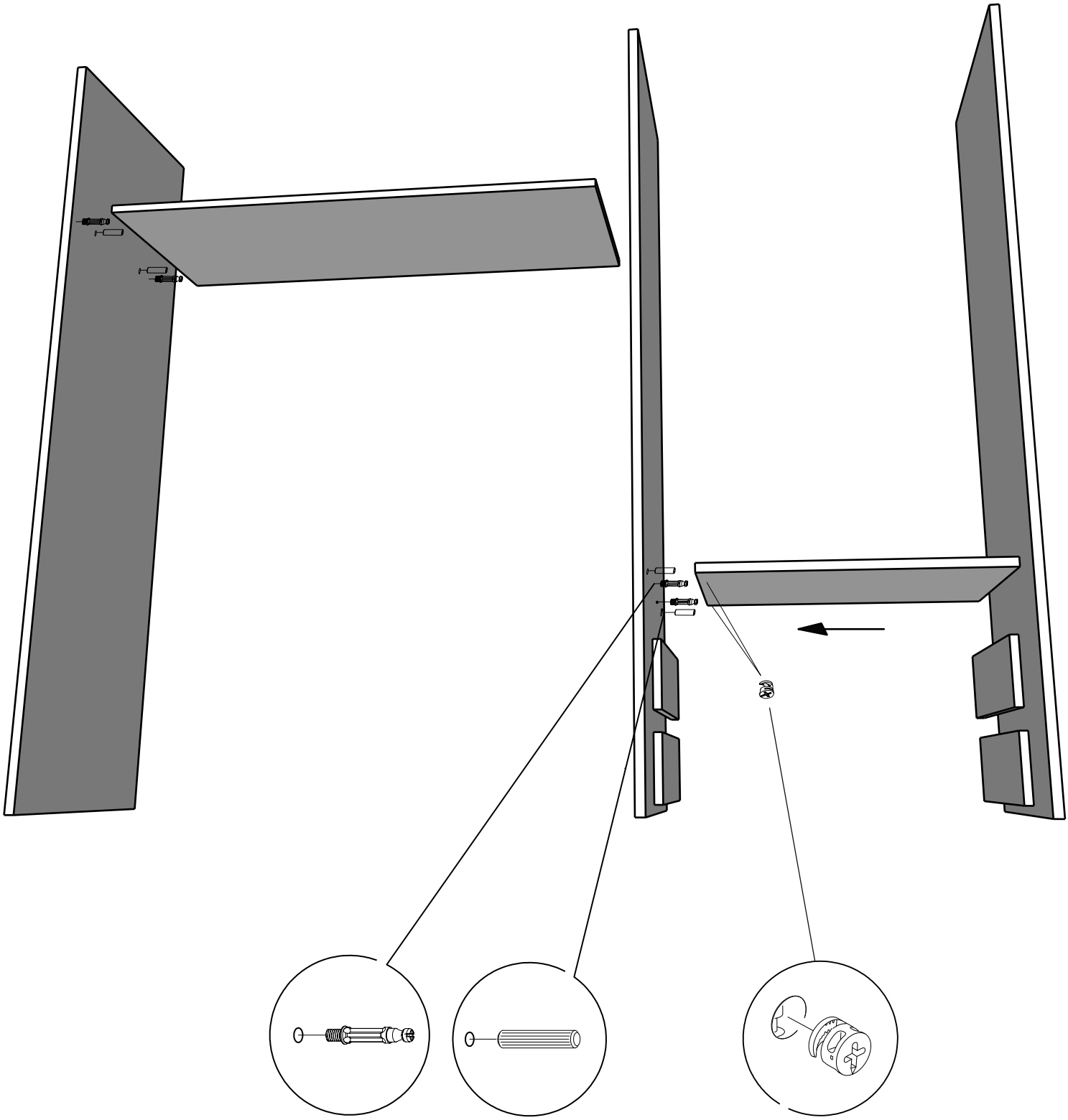

Note! If 2 doors wardrobe, then wider detail (431 x 570mm) will go on right side.

2

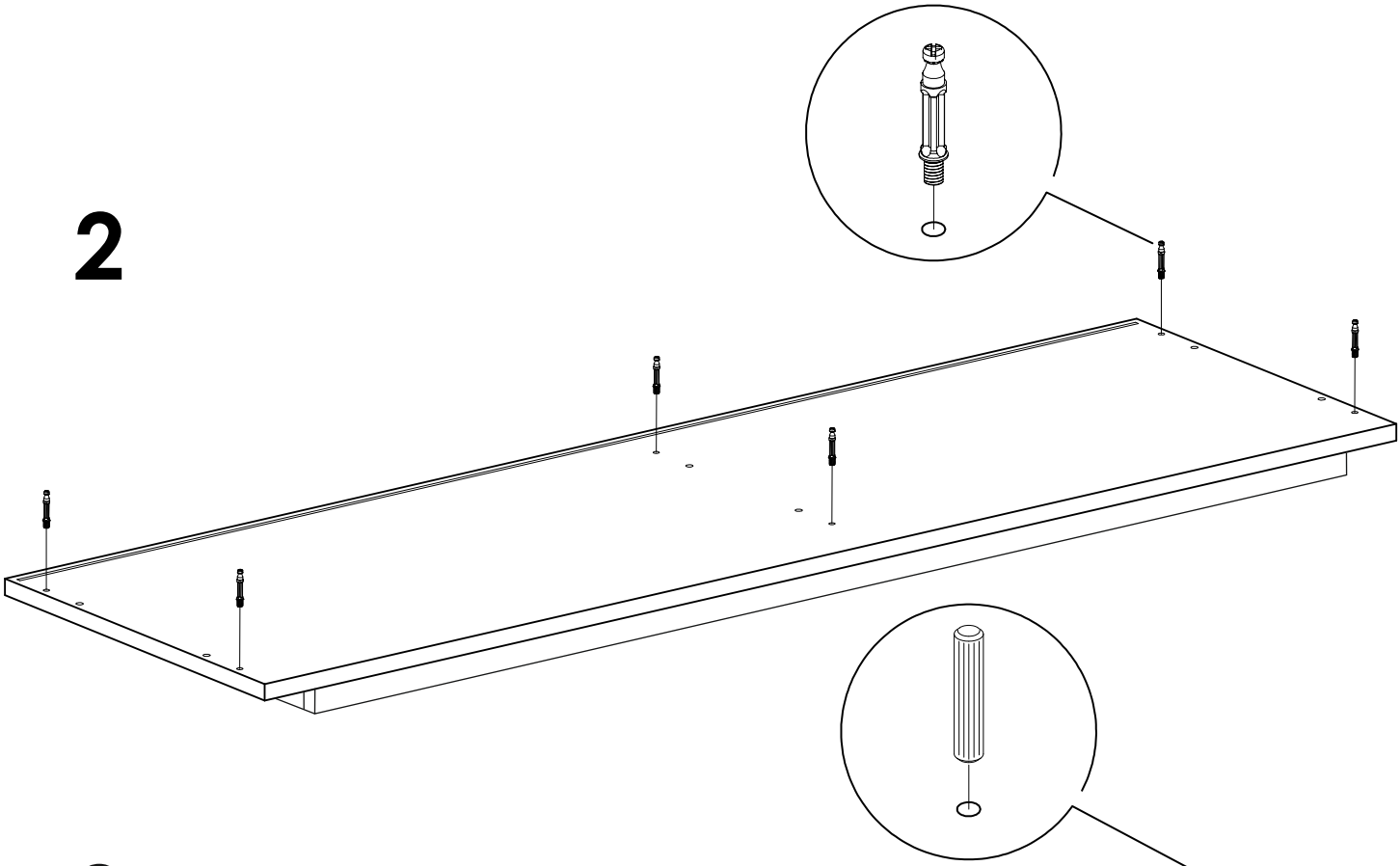

3

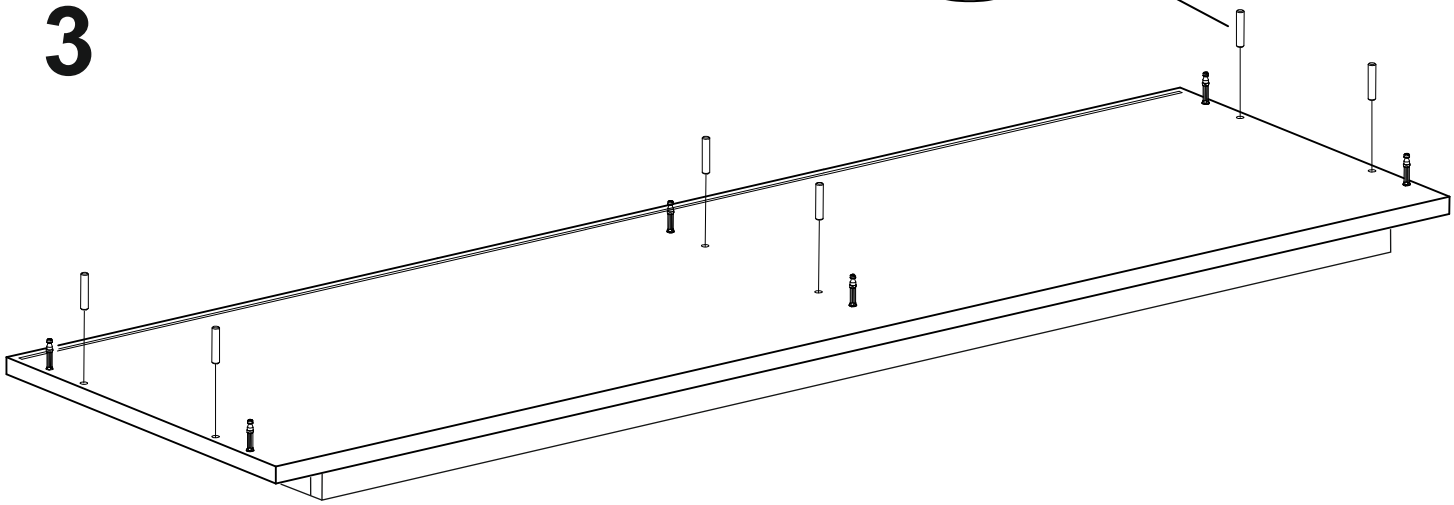

4

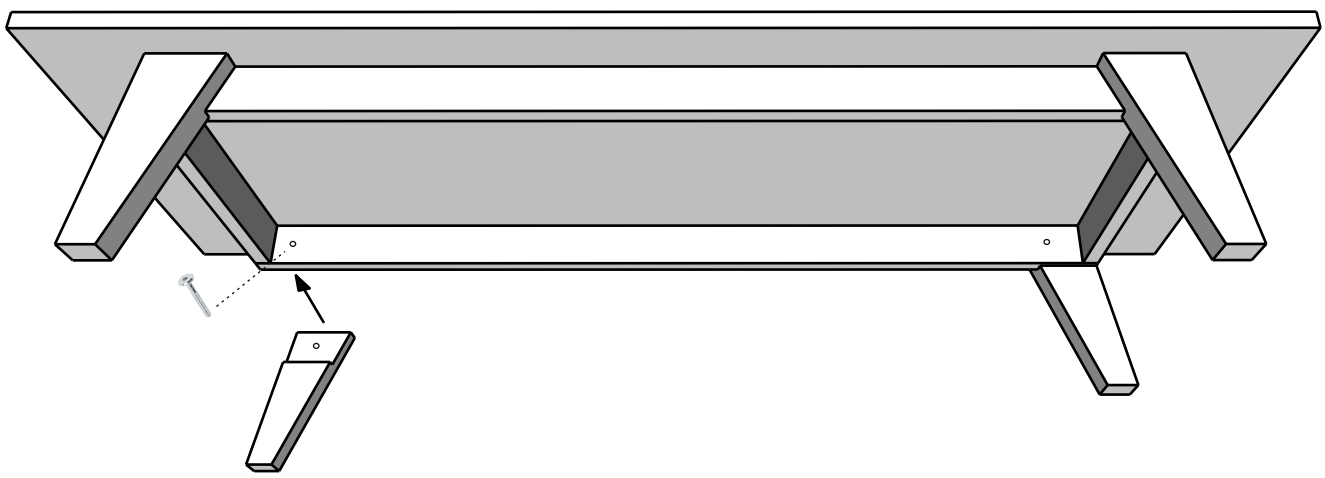

5

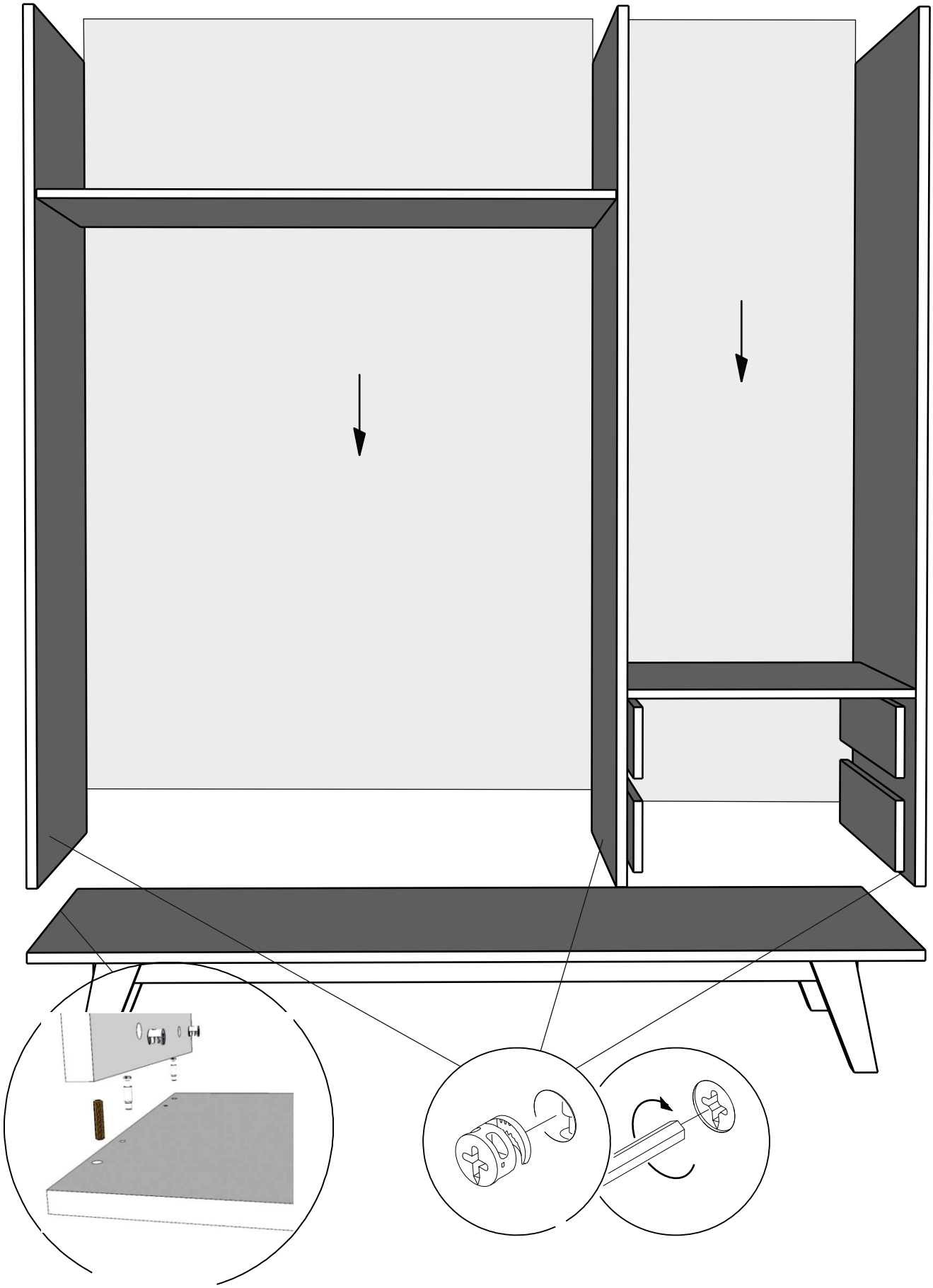

6

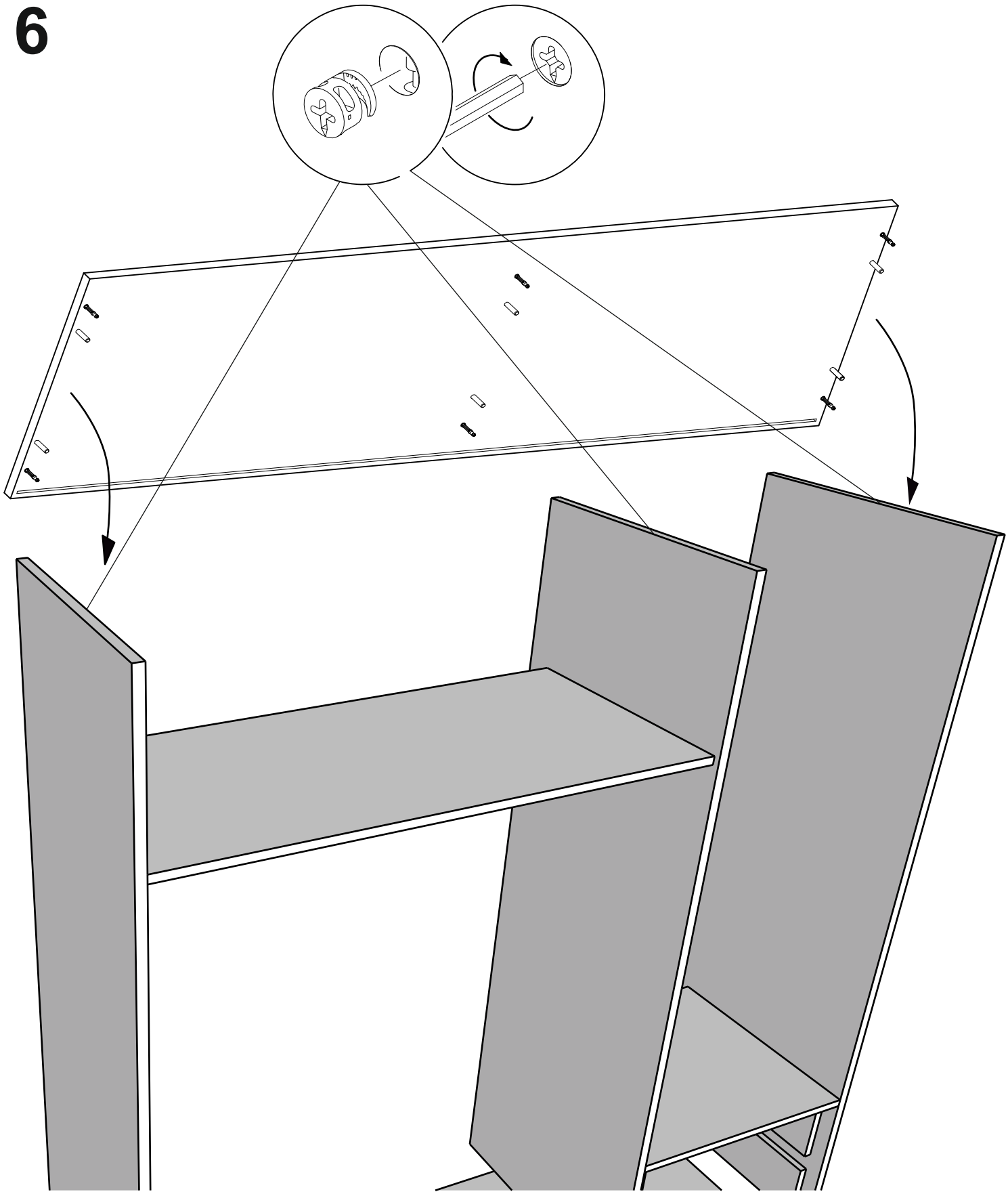

7

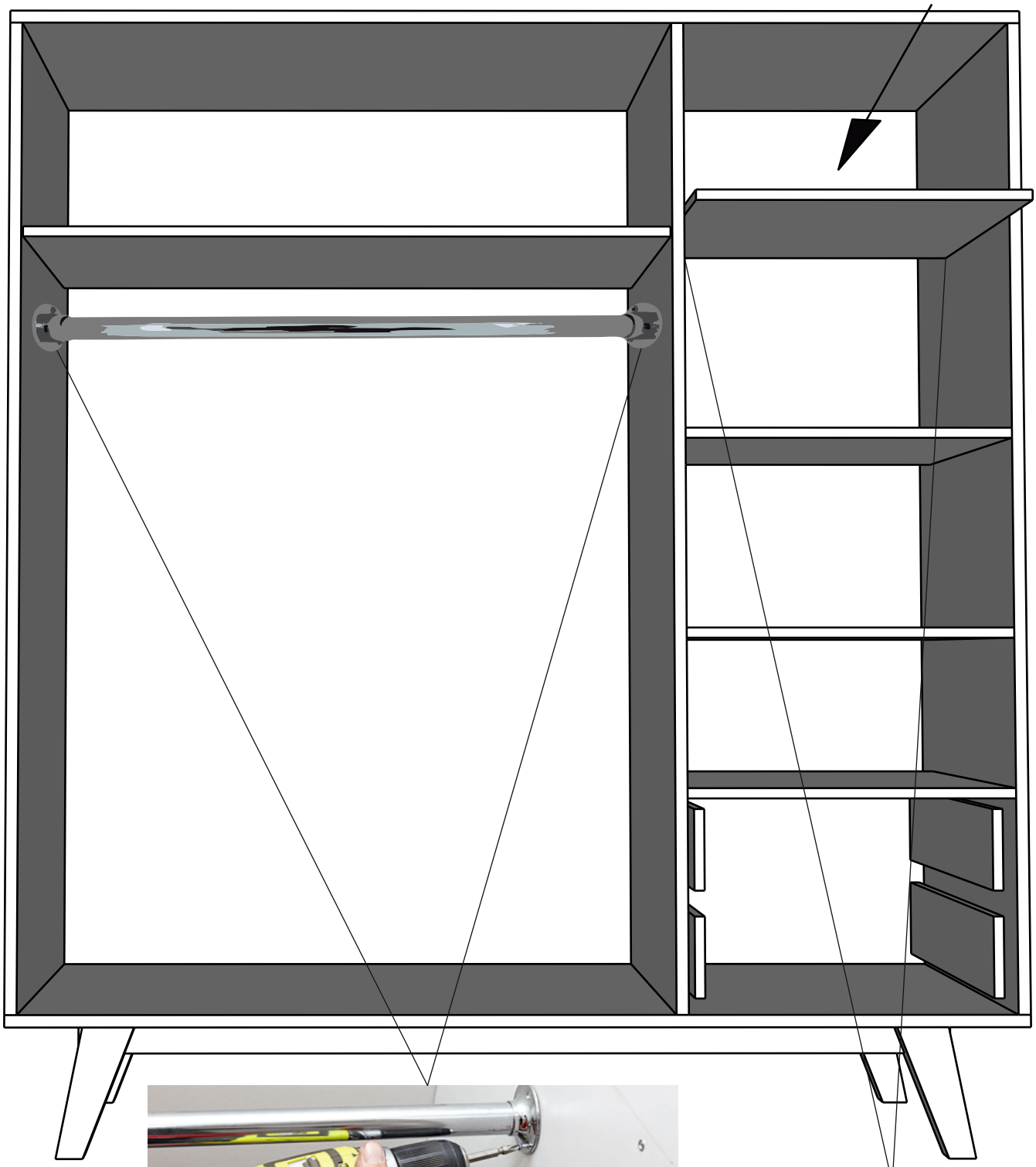

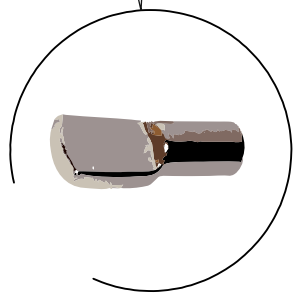

8

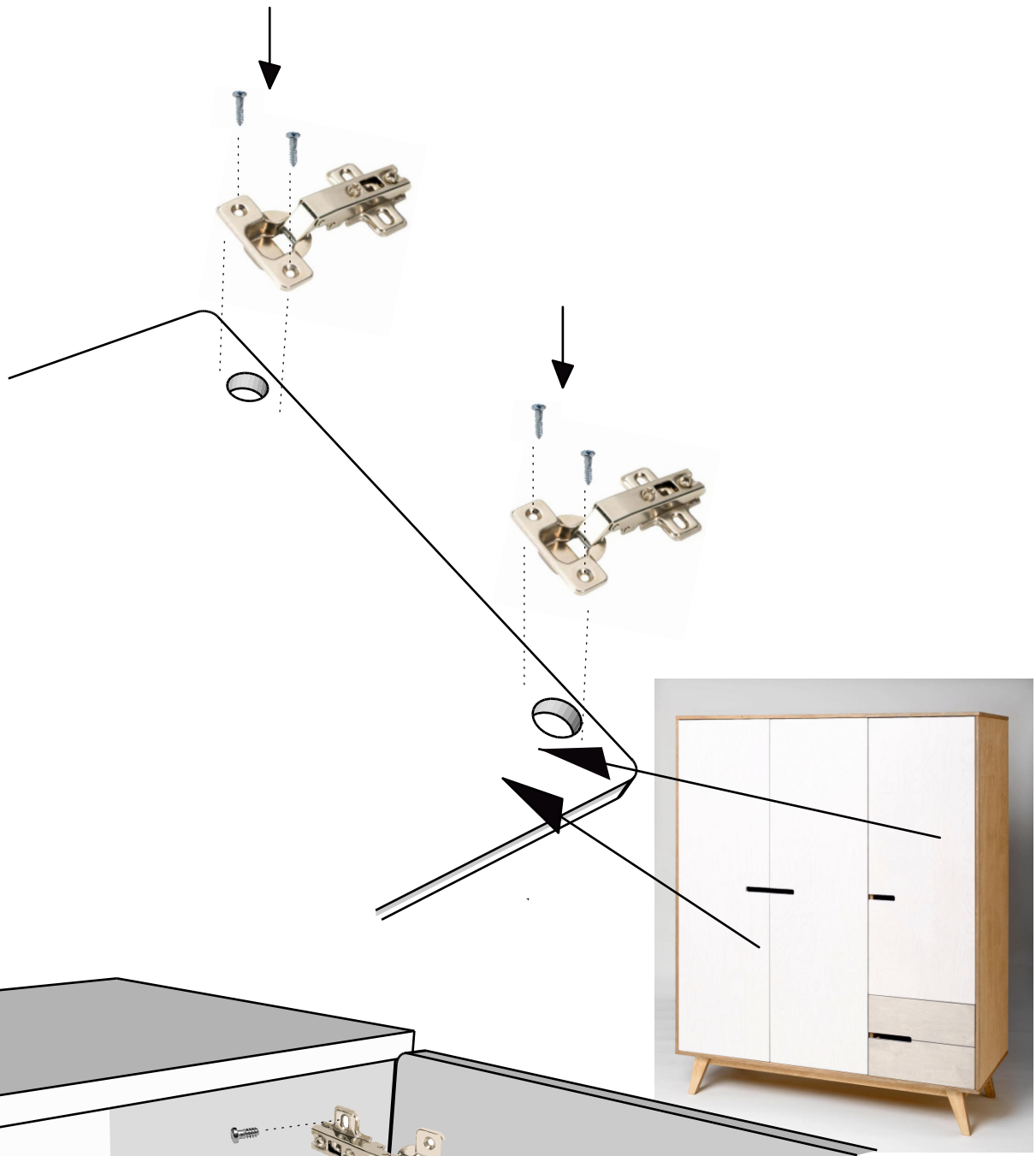

9

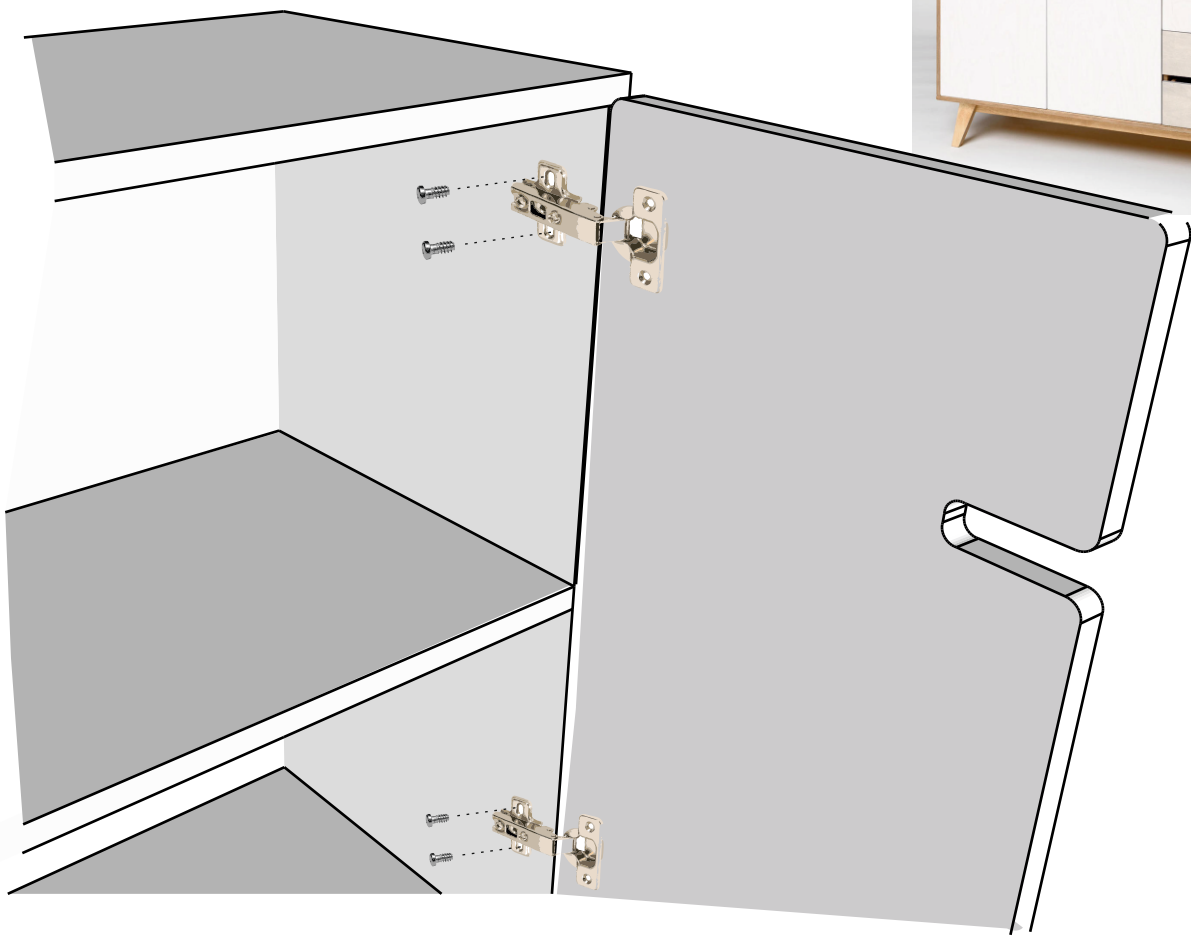

10

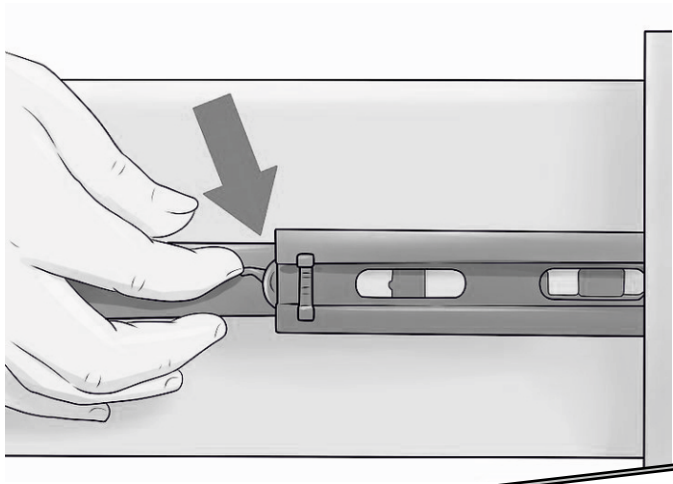

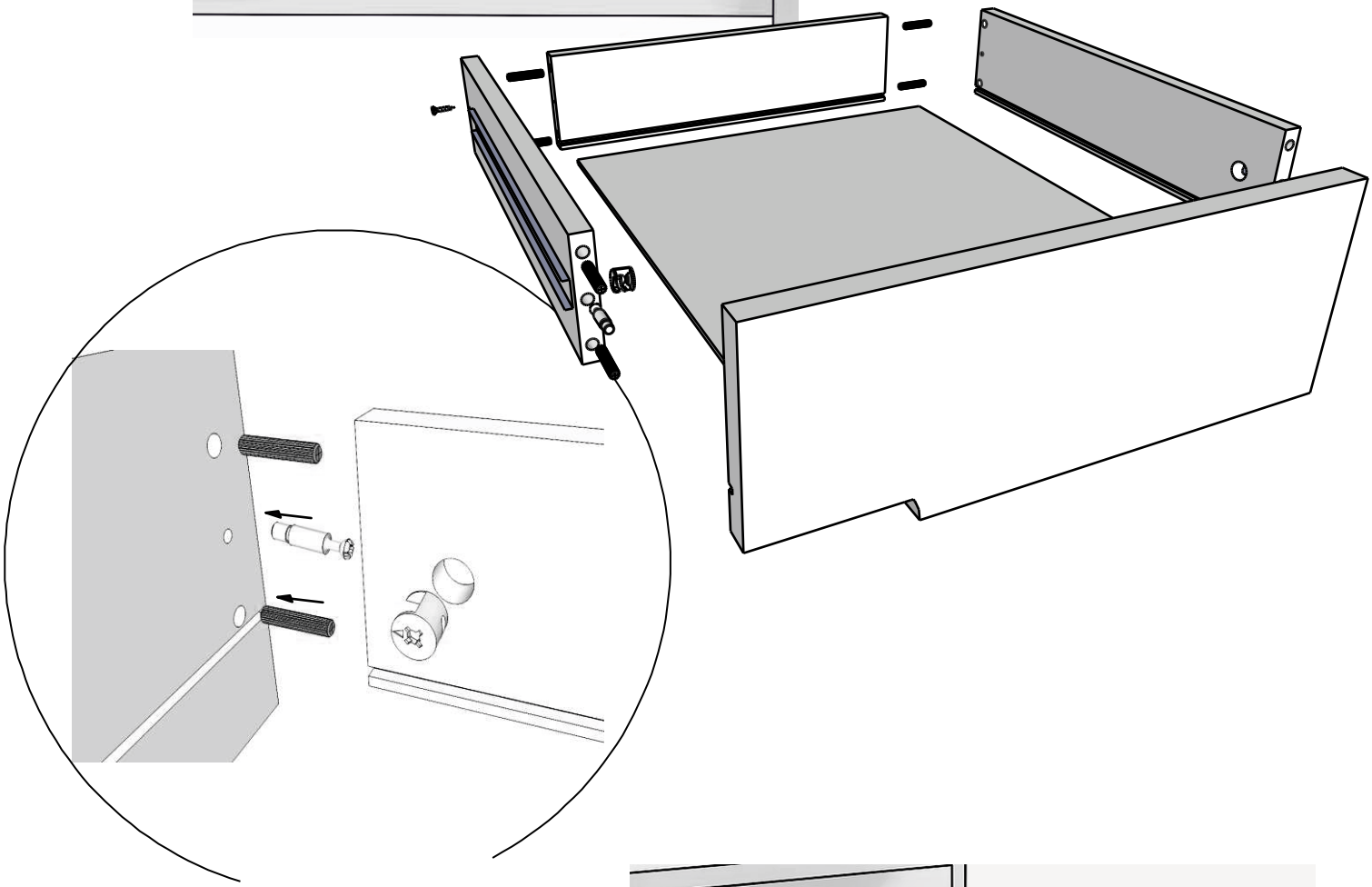

11

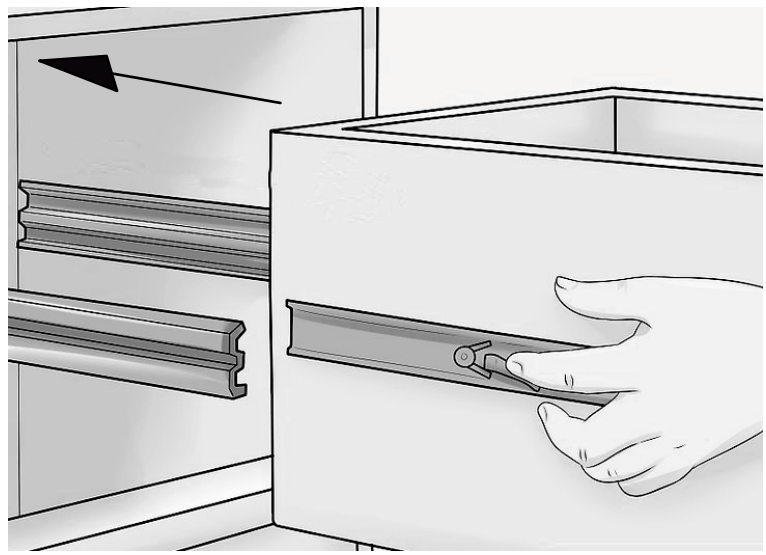

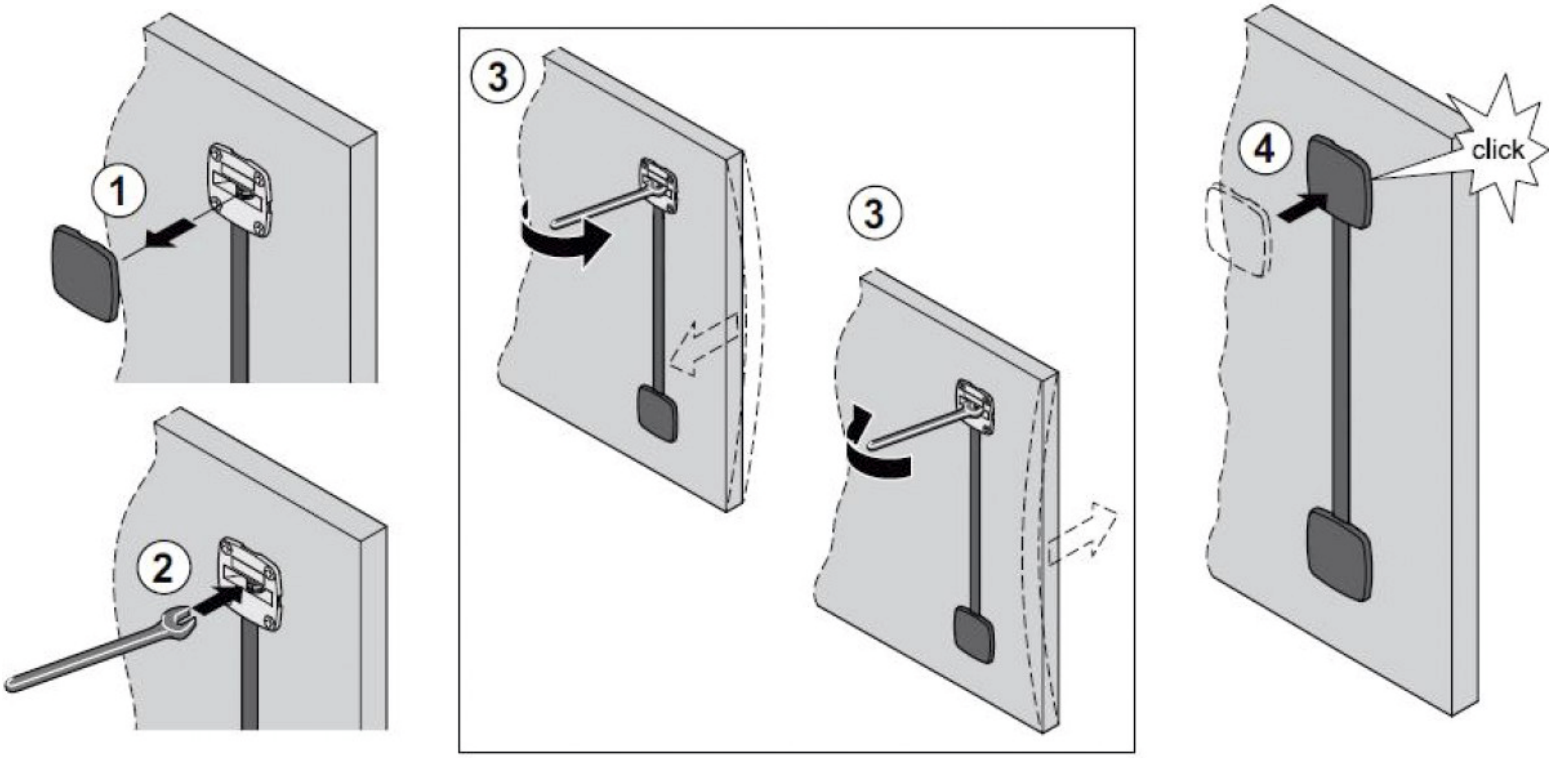
1
2
3
3
4
click